A

BRAC UNIVERSITY
Department of Computer Science and Engineering

Examination: Semester Final Exam | Semester: Fall 2025
Duration: 1 Hour 50 Minutes | Full Marks: 35

CSE 221: Algorithms

Answer the following questions.
Figures in the right margin indicate marks.

Name:	ID:	Section:

1 Consider the directed graph given below.

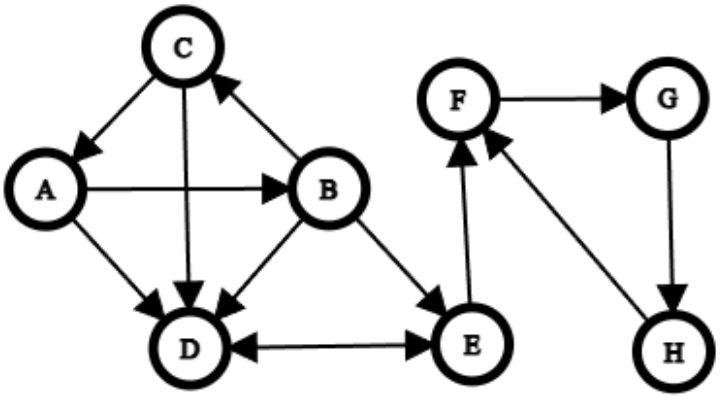

a. **CO1** **Simulate** a DFS on the graph to find the Discovery and Finish times for each vertex. Start with Vertex 'A'. **3**

b. **CO1** Now, **simulate** an appropriate algorithm to identify the Strongly Connected Components. You can reuse your answer to Question (a) to save time. **3**

c. **CO1** **Find** out the minimum number of edges to remove from the graph, so that there exists a topological order among the vertices. **Explain** your reasoning. **2**

d. **CO1** If we consider each SCC [that you found in Question (b)] as a single vertex, will there be any remaining cycles in the graph? **Draw** the graph to justify your answer. **2**

2 A country has several cities that need to be connected by highways. Each edge in the graph represents a potential highway connection between two cities, with weights indicating the **construction cost** of building that highway.

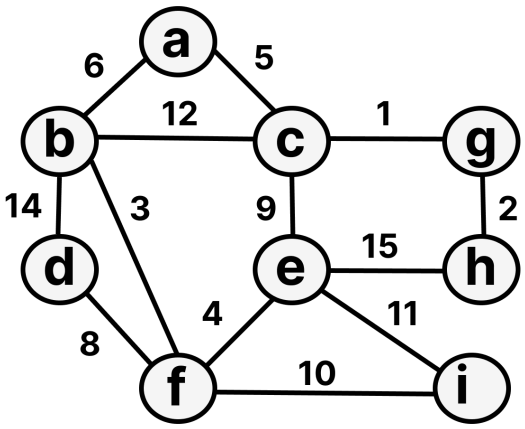

a. CO1 The government wants to ensure all cities remain connected while minimizing the total construction cost. Simulate a suitable algorithm to determine which highways should be built. Report the total minimum construction cost. **4**

b. CO1 Is it possible for a road network (not necessarily the one given above) to have multiple different configurations of highways, each resulting in the same minimum total construction cost? **2**

If yes, provide a simple example graph where this occurs. If not, justify your answer with proper reasoning.

c. CO2 Now, assume **all highways have been constructed** as shown in the graph. The government has installed toll plazas on each highway. The edge weights now represent the toll fees for using each highway. You're planning a trip from a source city to a destination city and want to minimize your total toll cost. You have a special coupon that allows you to skip paying the toll on **only one** highway (you can use it at most once during your journey). **4**

Your friend proposed a modified approach: *First, apply standard Dijkstra's algorithm to find the shortest path from source to destination while keeping track of which edge has the highest toll cost on this path. Then, use the coupon on that edge to skip its toll cost. According to your friend, this will guarantee the minimum total toll cost from source to destination.*

Do you agree that this approach will guarantee the shortest path in all cases, regardless of how the cities are connected, given that all toll fees are positive? If yes, provide proper reasoning. If not, provide a counterexample showing where this approach will fail.

3 You are designing a lossless data compression module for a real-time monitoring system. After analyzing system logs, the following character frequency distribution is obtained:

Character	Frequency
D	5
A	30
R	12
B	18
C	10
E	4
U	8

a. **CO1** Even though all character frequencies are unique, one can obtain different Huffman Trees for above characters. Is this possible? **Explain** whether the bit patterns and the optimality of the code will be affected by this. **2**

b. **CO1** **Simulate** the Huffman Encoding algorithm for the given characters. Construct the huffman tree, generate Huffman code and bits required for each character. (consider left edge as 0, right as 1). **4**

c. **CO2** If you were to send the message "BRACU" with an 8-bit encoding scheme, how many extra bits would have been required compared to Huffman encoding? Ignore the size of the code table. **2**

d. **CO2** "In Huffman Encoding, a higher-frequency symbol always gets a shorter codeword than a lower-frequency symbol." Is this statement always true? **Explain**. **2**

4

This is the LCS Table for two strings $X=X_1X_2X_3X_4$ and $Y=Y_1Y_2Y_3Y_4$

i\j	-	X_1	X_2	X_3	X_4
-	0	0	0	0	0
Y_1	0	0	0	0	0
Y_2	0	0	0	**1**	1
Y_3	0	0	1	1	2
Y_4	0	1	1	**1**	2

a. **CO1** What is the direction of cells where values are underlined, i.e which adjacent cells they came from? **2**

b. **CO1** If String Y = <Rightmost four digits of Your Student ID>, **construct** a correct String X. **2**

c. **CO2** The formula to find LCS can be implemented both iteratively and recursively. Which one would be more efficient? **Explain** your answer briefly. **1**

B

BRAC UNIVERSITY
Department of Computer Science and Engineering

Examination: Semester Final Exam | Semester: Fall 2025
Duration: 1 Hour 50 Minutes | Full Marks: 35

CSE 221: Algorithms

Answer the following questions.
Figures in the right margin indicate marks.

Name:	ID:	Section:

1 Consider the directed graph given below.

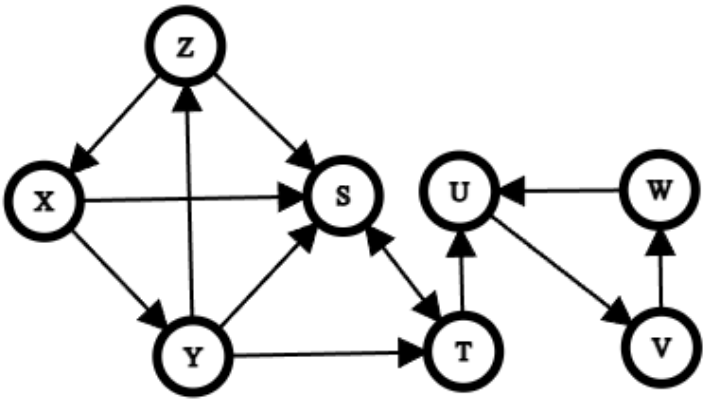

a. **CO1** **Simulate** a DFS on the graph to find the Discovery and Finish times for each vertex. Start with Vertex 'A'. **3**

b. **CO1** Now, **simulate** an appropriate algorithm to identify the Strongly Connected Components. You can reuse your answer to Question (a) to save time. **3**

c. **CO1** **Find** out the minimum number of edges to remove from the graph, so that there exists a topological order among the vertices. **Explain** your reasoning. **2**

d. **CO1** If we consider each SCC [that you found in Question (b)] as a single vertex, will there be any remaining cycles in the graph? **Draw** the graph to justify your answer. **2**

2 A country has several cities that need to be connected by highways. Each edge in the graph represents a potential highway connection between two cities, with weights indicating the **construction cost** of building that highway.

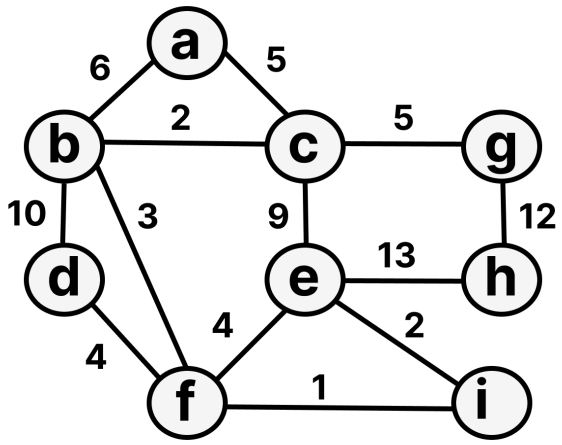

a. CO1 The government wants to ensure all cities remain connected while minimizing the total construction cost. Simulate a suitable algorithm to determine which highways should be built. Report the total minimum construction cost. **4**

b. CO1 Is it possible for a road network (not necessarily the one given above) to have multiple different configurations of highways, each resulting in the same minimum total construction cost? **2**

If yes, provide a simple example graph where this occurs. If not, justify your answer with proper reasoning.

c. CO2 Now, assume **all highways have been constructed** as shown in the graph. The government has installed toll plazas on each highway. The edge weights now represent the toll fees for using each highway. You're planning a trip from a source city to a destination city and want to minimize your total toll cost. You have a special coupon that allows you to skip paying the toll on **only one** highway (you can use it at most once during your journey). **4**

Your friend proposed a modified approach: *First, apply standard Dijkstra's algorithm to find the shortest path from source to destination while keeping track of which edge has the highest toll cost on this path. Then, use the coupon on that edge to skip its toll cost. According to your friend, this will guarantee the minimum total toll cost from source to destination.*

Do you agree that this approach will guarantee the shortest path in all cases, regardless of how the cities are connected, given that all toll fees are positive? If yes, provide proper reasoning. If not, provide a counterexample showing where this approach will fail.

3 You are designing a lossless data compression module for a real-time monitoring system. After analyzing system logs, the following character frequency distribution is obtained:

Character	Frequency
A	28
T	16
L	11
S	9
N	7
K	5
H	3

a. CO1 Even though all character frequencies are unique, one can obtain different Huffman Trees for above characters. Is this possible? **Explain** whether the bit patterns and the optimality of the code will be affected by this. **2**

b. CO1 **Simulate** the Huffman Encoding algorithm for the given characters. Construct the huffman tree, generate Huffman code and bits required for each character. (consider left edge as 0, right as 1). **4**

c. CO2 If you were to send the message "THANKS" with an 8-bit encoding scheme, how many extra bits would have been required compared to Huffman encoding? Ignore the size of the code table. **2**

d. CO2 "In Huffman Encoding, a higher-frequency symbol always gets a shorter codeword than a lower-frequency symbol." Is this statement always true? **Explain**. **2**

4

This is the LCS Table for two strings $X=X_1X_2X_3X_4$ and $Y=Y_1Y_2Y_3Y_4$

i\j	-	Y_1	Y_2	Y_3	Y_4
-	0	0	0	0	0
X_1	0	0	0	0	0
X_2	0	0	0	1	1
X_3	0	0	1	1	2
X_4	0	**1**	1	**1**	2

a. CO1 What is the direction of cells where values are underlined, i.e which adjacent cells they came from? **2**

b. CO1 If String X = <Rightmost four digits of Your Student ID>, **construct** a correct String Y. **2**

c. CO2 The formula to find LCS can be implemented both iteratively and recursively. Which one would be more efficient? **Explain** your answer briefly. **1**